MAXITROL®

AV Series Dual Control Gas Oven Valve

DESCRIPTION

The AV Series gas safety control valve is a snap-acting, thermally actuated bimetal valve. It is engineered to ensure safe and efficient operation primarily in the residential gas oven segment of the cooking appliance market. Designed for reliability, the dual configuration provides independent gas control for two burners, typically supporting separate bake and broil functions. The valve offers rapid shutoff in response to changes in power conditions, enhancing user safety and performance of the appliance.

Multiple configurations, fittings, and mounting bracket options are available to accommodate various appliance designs.

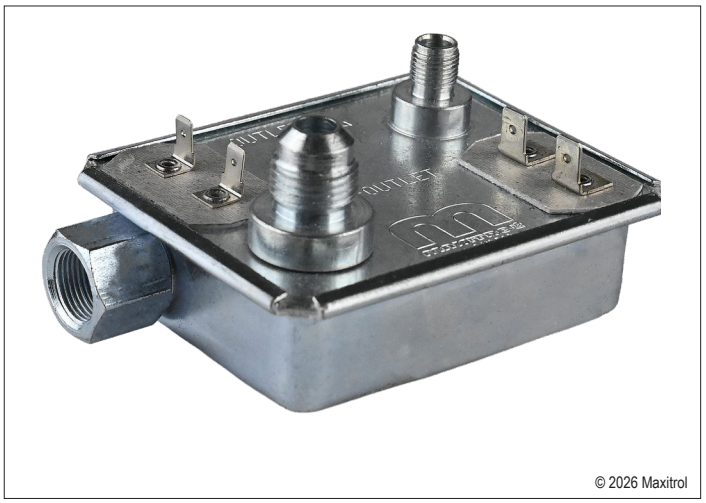

Figure 1: Dual Gas Valve (AV22, AV24)

SPECIFICATIONS

Certifications: ANSI Z21.21/CSA 6.5 Automatic Valves for Gas Appliances

Ambient Temperature Range: 0°F to 300°F

Rated Inlet Pressure: 1/2 psi

Mounting Position: multi-positional

Mounting Type: #8-32 Stud

Terminals: #1 3/16” Male, #2 1/4” Male

Ignition System: CoorsTek (Norton) 501

Electrical Rating: 3 VAC @ 3.3-3.6 Amps

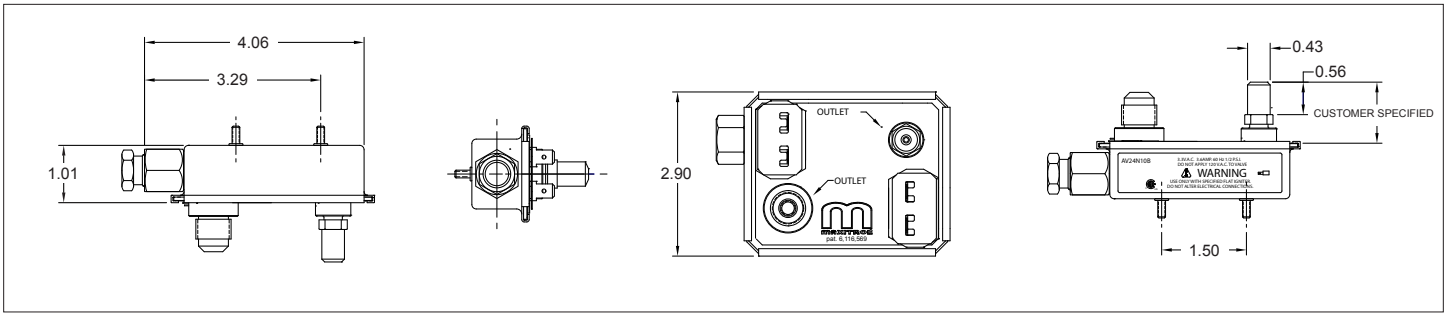

Figure 2: Valve Dimentions

Part Number	Inlet Connection	Outlet Connection		Inlet/Outlet Screen	Capacity
		#1	#2		
AV22N04E-L6HC6	3/8” Loxit	Orifice	3/8” X 45 SAE Flare	Inlet Only	32,000 Btu/h @ 0.64 sp gr gas
AV22N04E-L6L6L6		3/8” Loxit	3/8” Loxit		
AV22N04E-L6C6C6		3/8” X 45 SAE Flare	3/8” X 45 SAE Flare		
AV24N04E-L6HC6		Orifice	3/8” X 45 SAE Flare	Inlet & Outlet	25,000 Btu/h @ 0.64 sp gr gas
AV24N04E-L6L6L6		3/8” Loxit	3/8” Loxit		
AV24N04E-L6C6C6		3/8” X 45 SAE Flare	3/8” X 45 SAE Flare		

Table 1: Specifications

MAXITROL®

Maxitrol Company
23555 Telegraph Rd., P.O. Box 2230
Southfield, MI 48037-2230 U.S.A.

AV_B_MI_EN_10.2026

www.maxitrol.com
© 2026 Maxitrol Company
All Rights Reserved.